mugen seiki		Tires		Clutch settings		Front shocks		Engine	
		Front shore	left 32 / right 32	Shoe	kit	Piston	1	Type	
Date/ Track		Rear shore	left 35 / right 35	Bell clearance (mm)	0,7	Oil	600	Plug/ Fuel	Plug / Fuel
Driver		Front ∅	left 68 / right 68	Spring	kit	Spring	white	Pipe/ Manifold	Pipe / Manifold
Temp. °C.	air / track	Rear ∅	left 75 / right 75	Bell axial play (mm)	0,1-0,2	Rear shocks		Gear ratio chart	
Track layout/ traction	technical ○ low ○	Body		Gearing		Piston	2		
	mixed ● medium ●	Type		1st gear	16 / 49	Oil	600		
	fast ○ high ○	Wing position (mm)	8	2n gear	20 / 46	Spring	white		

		1st			2nd		
		48	49	50	45	46	47
1st	16	7,2	7,35	7,5			
	17	6,776	6.918	7,059			
2nd	19				5,684	5,811	5,937
	20				5,4	5,52	5,64
	21				5,143	5,257	5,371

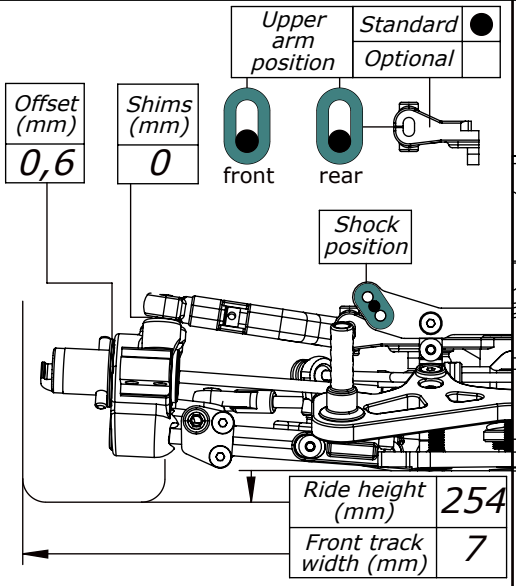

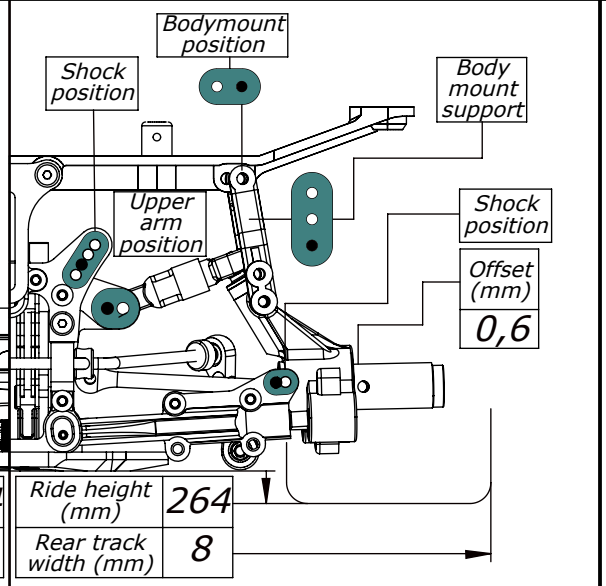

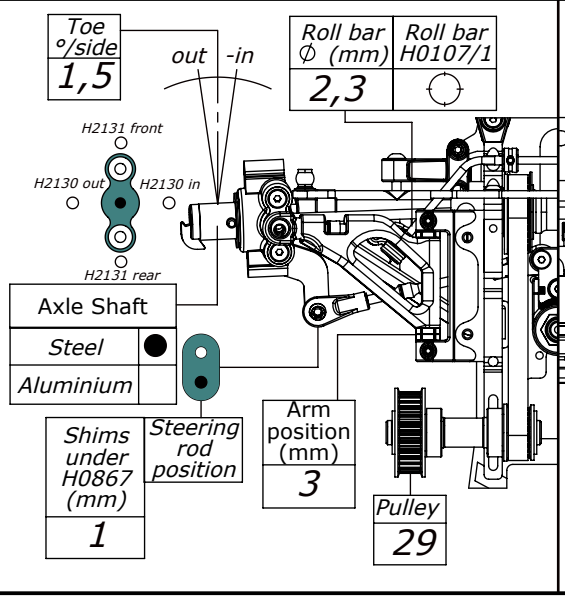

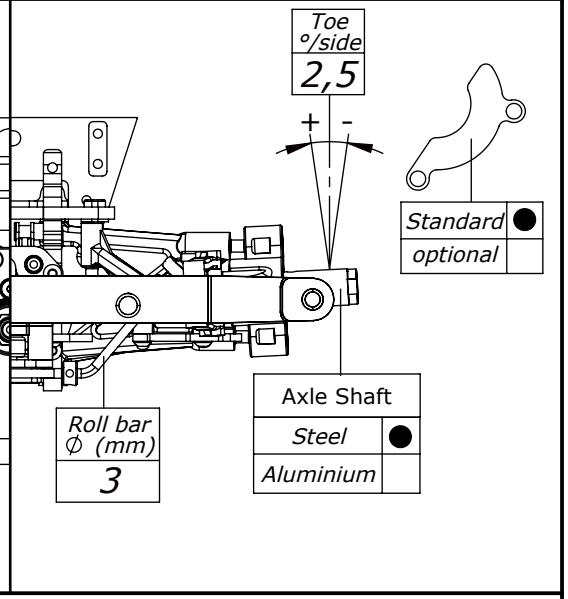

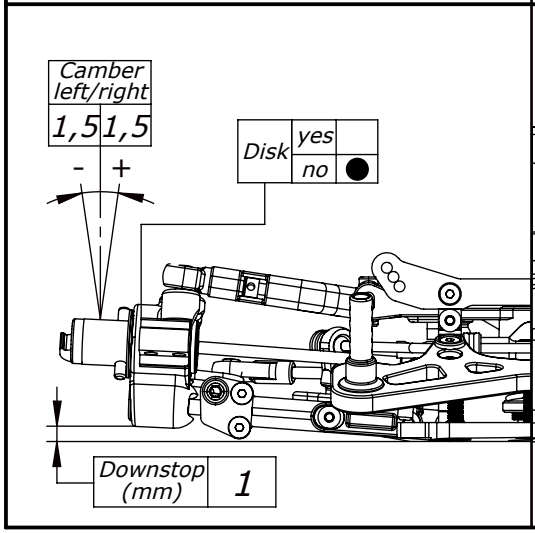

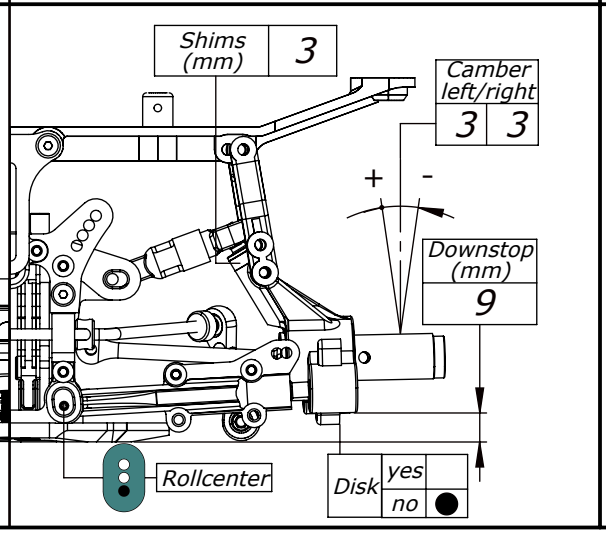

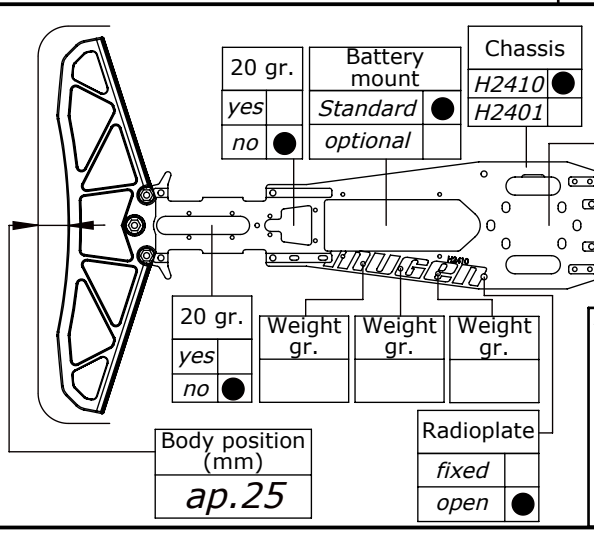

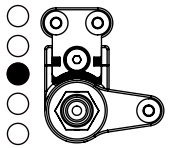

Servo saver position

Note: