1/8th Scale Gas Powered 4WD GT Car MGT 7 Parts List (E2017)

1/8 スケール4WD GT カー MGT7パーツリスト (E2017)

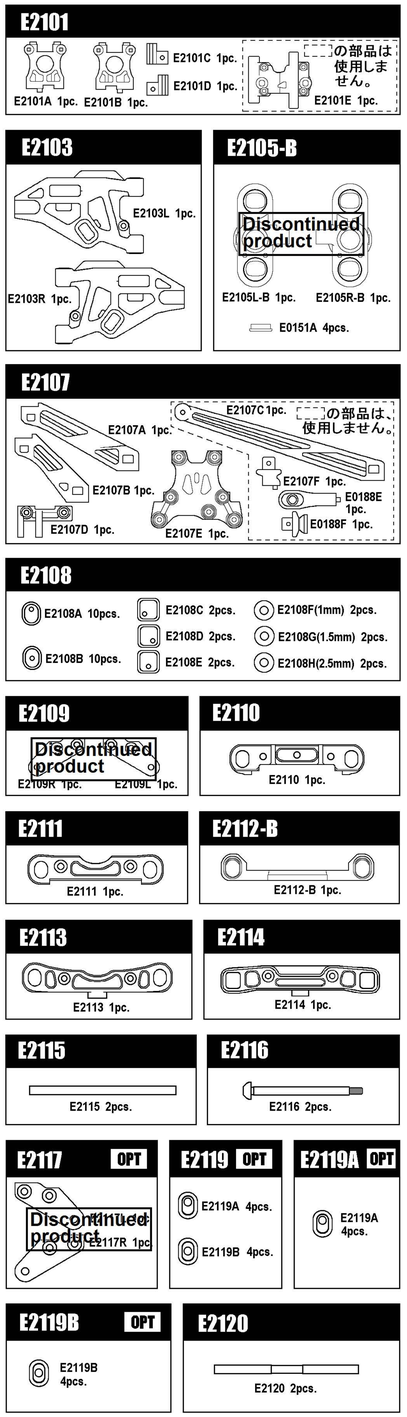

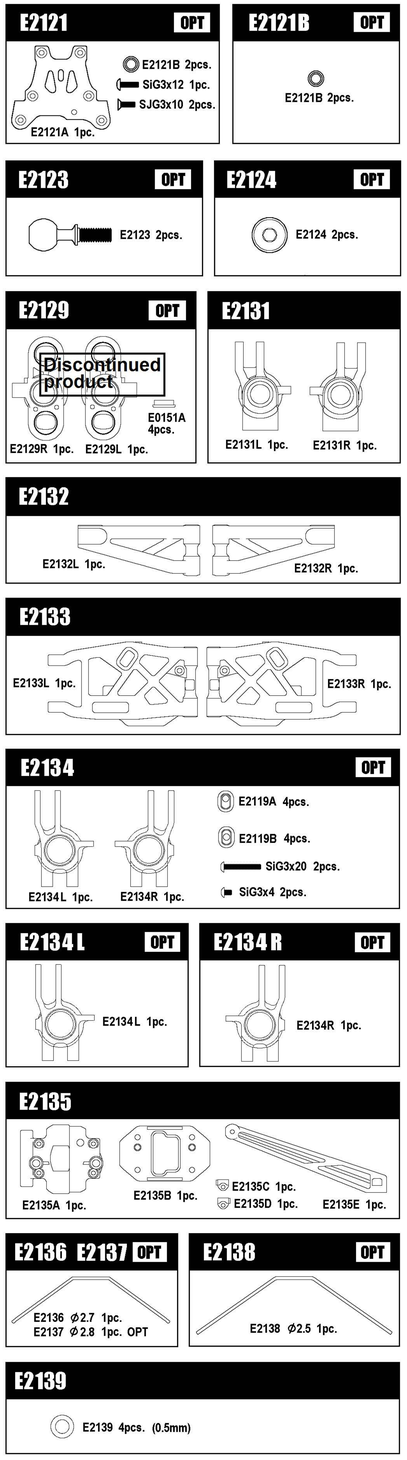

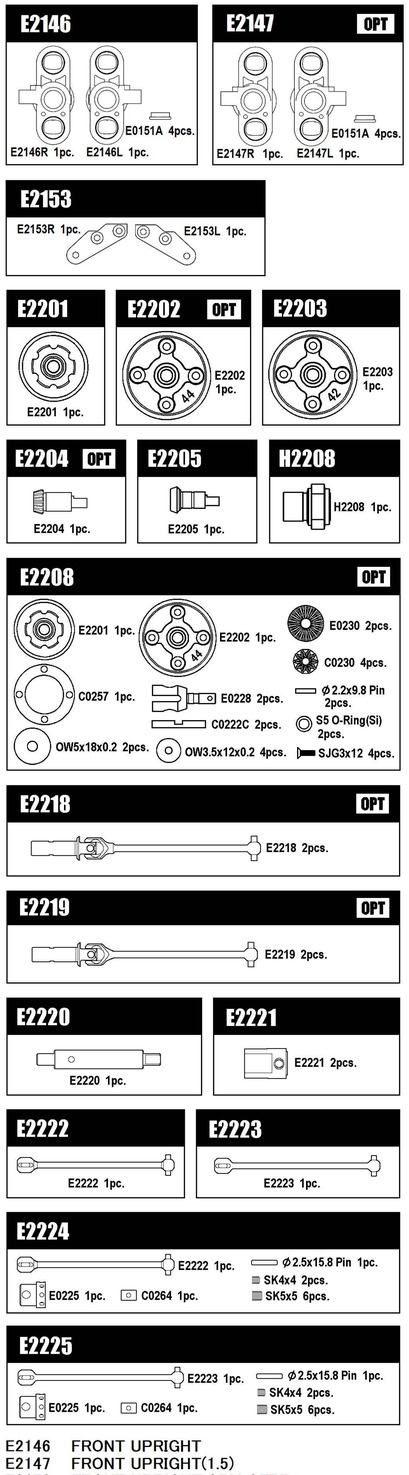

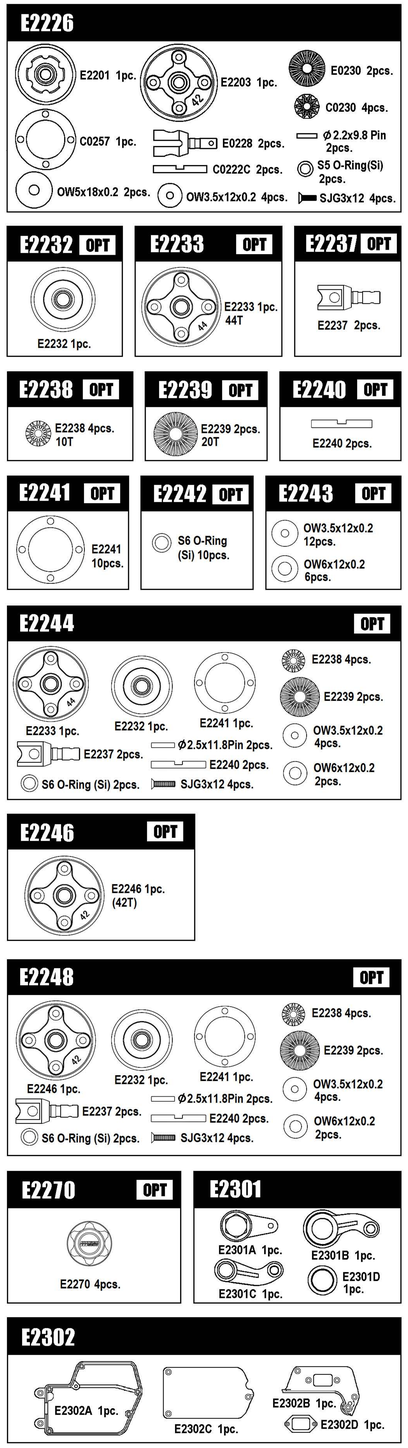

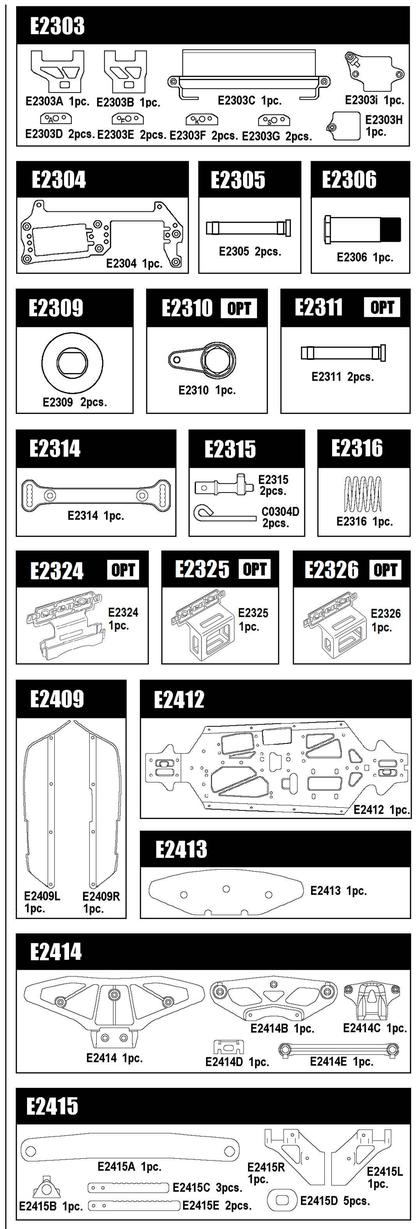

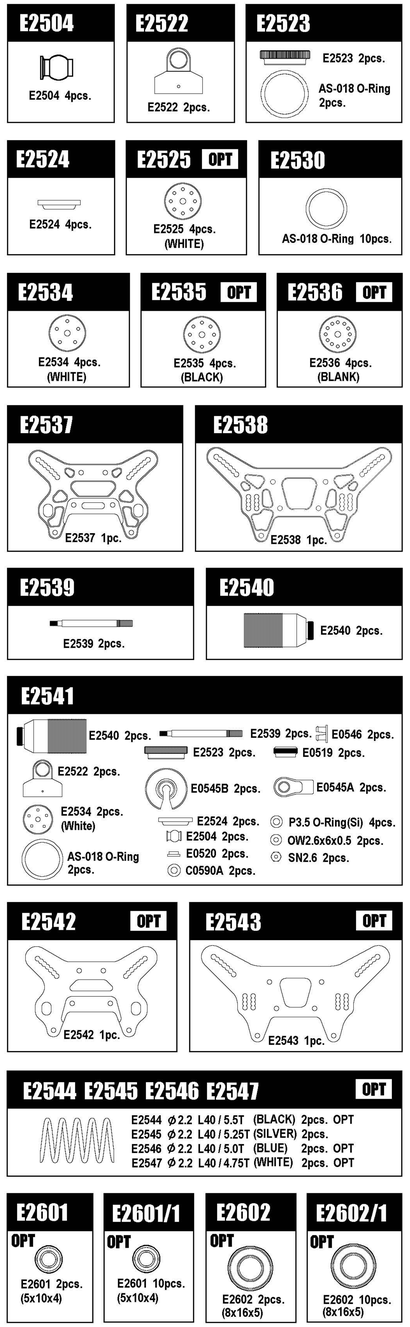

E2101 CENTER DIFF. MOUNT
E2103 FRONT LOWER ARM
~~E2105-B FRONT UPRIGHT~~
E2107 TENSION ROD
E2108 BUSH SET
~~E2109 FRONT UPRIGHT ARM~~
E2110 FRONT LOWER ARM MOUNT F
E2111 FRONT LOWER ARM MOUNT R
E2112-B FRONT UPPER ARM MOUNT
E2113 REAR LOWER ARM MOUNT F
E2114 REAR LOWER ARM MOUNT R
E2115 FRONT LOWER ARM SHAFT
E2116 REAR LOWER ARM SHAFT S
~~E2117 FRONT UPRIGHT ARM CFRP~~
E2119 REAR UPRIGHT BUSH
E2119A REAR UPRIGHT BUSH A
E2119B REAR UPRIGHT BUSH B
E2120 REAR LOWER ARM SHAFT L

E2121 FRONT UPPER PLATE CFRP
E2121B SERVO SAVER SPACER (FOR 2121)
E2123 KINGPIN BALL (STEEL)
E2124 ADJUST NUT (STEEL)
~~E2129 FRONT UPRIGHT~~
E2131 REAR UPRIGHT
E2132 FRONT UPPER ARM
E2133 REAR LOWER ARM
E2134 AL. REAR UPRIGHT SET
E2134L AL. REAR UPRIGHT L
E2134R AL. REAR UPRIGHT R
E2135 2SPEED GEAR COVER
E2136 FRONT ANTI-ROLL BAR ϕ2.7mm
E2137 FRONT ANTI-ROLL BAR ϕ2.8mm
E2138 REAR ANTI-ROLL BAR ϕ2.5mm
E2139 FRONT TRACK WIDTH ADJ. SPACER (0.5mm)

E2146 FRONT UPRIGHT
E2147 FRONT UPRIGHT(1.5)
E2153 FRONT UPRIGHT ARM CFRP
E2201 DIFF. CASE
E2202 CONICAL GEAR 44T
E2203 CONICAL GEAR 42T
E2204 BEVEL GEAR 13T
E2205 BEVEL GEAR 12T
H2208 2SPEED ADAPTER
E2208 F/R DIFF. GEAR SET
E2218 FRONT UNIVERSAL JOINT
E2219 REAR UNIVERSAL JOINT
E2220 2SPEED SHAFT
E2221 CENTER JOINT CUP
E2222 CENTER DRIVE SHAFT (89)
E2223 CENTER DRIVE SHAFT (94)
E2224 CENTER DRIVE SHAFT (89) SET
E2225 CENTER DRIVE SHAFT (94) SET

E2226 F/R DIFF. GEAR SET 42T
E2232 DIFF. CASE (H.T. DIFF.)
E2233 CONICAL GEAR 44T (H.T. DIFF.)
E2237 DIFF. CUP JOINT (H.T. DIFF.)
E2238 DIFF. GEAR 10T (H.T. DIFF.)
E2239 DIFF. GEAR 20T (H.T. DIFF.)
E2240 DIFF. CROSS SHAFT (H.T. DIFF.)
E2241 GASKET FOR DIFF. (H.T. DIFF.)
E2242 S6 O-RINGS (H.T. DIFF.)
E2243 DIFF. WASHER SET (H.T. DIFF.)
E2244 H.T. F/R DIFF. GEAR SET 44T
E2246 CONICAL GEAR 42T (H.T. DIFF.)
E2248 H.T. F/R DIFF. GEAR SET 42T
E2270 CLOSED WHEEL NUT
E2301 SERVO SAVER
E2302 RADIO BOX

E2303 RADIO PLATE MOUNT
E2304 RADIO PLATE
E2305 SERVO SAVER SHAFT
E2306 SERVO SAVER PIPE
E2309 BRAKE DISC
E2310 AL. SERVO SAVER ARM
E2311 AL. SERVO SAVER SHAFT
E2314 STEERING PLATE
E2315 BRAKE CAM
E2316 SERVO SAVER SPRING (HARD)
E2324 BATTERY CONNECTOR HOLDER
E2325 ELECTRIC SWITCH HOLDER (FUTABA,SANWA)
E2326 ELECTRIC SWITCH HOLDER (Protek,G-Force)
E2409 STONE GUARD
E2412 CHASSIS MGT7
E2413 FORM BUMPER
E2414 FRONT BUNPER
E2415 BODY MOUNT

E2504 DAMPER END BALL
E2522 DAMPER CAP
E2523 DAMPER SPRING ADJUSTER
E2524 DIAPHRAGM
E2525 DAMPER PISTON (ϕ1.3/8H)
E2530 AS-018 O-RINGS
E2534 DAMPER PISTON (ϕ1.35/5H)
E2535 DAMPER PISTON (ϕ1.2/8H)
E2536 DAMPER PISTON (BLANK)
E2537 FRONT DAMPER STAY
E2538 REAR DAMPER STAY
E2539 DAMPER SHAFT
E2540 DAMPER CASE
E2541 DAMPER SET
E2542 FRONT DAMPER STAY CFRP
E2543 RAER DAMPER STAY CFRP
E2544 DAMPER SPRING ϕ2.2 L40/5.5T (BLACK)
E2545 DAMPER SPRING ϕ2.2 L40/5.25T (SILVER)
E2546 DAMPER SPRING ϕ2.2 L40/5.0T (BLUE)
E2547 DAMPER SPRING ϕ2.2 L40/4.75T (WHITE)
E2601 5x10 BEARING (NMB) 2pcs.
E2601/1 5x10 BEARING (NMB) 10pcs.
E2602 8x16 BEARING (NMB) 2pcs.
E2602/1 8x16 BEARING (NMB) 10pcs.

1/8th Scale Gas Powered 4WD GT Car MGT 7 Parts List (E2017)

1/8 スケール4WD GT カー MGT7パーツリスト (E2017)

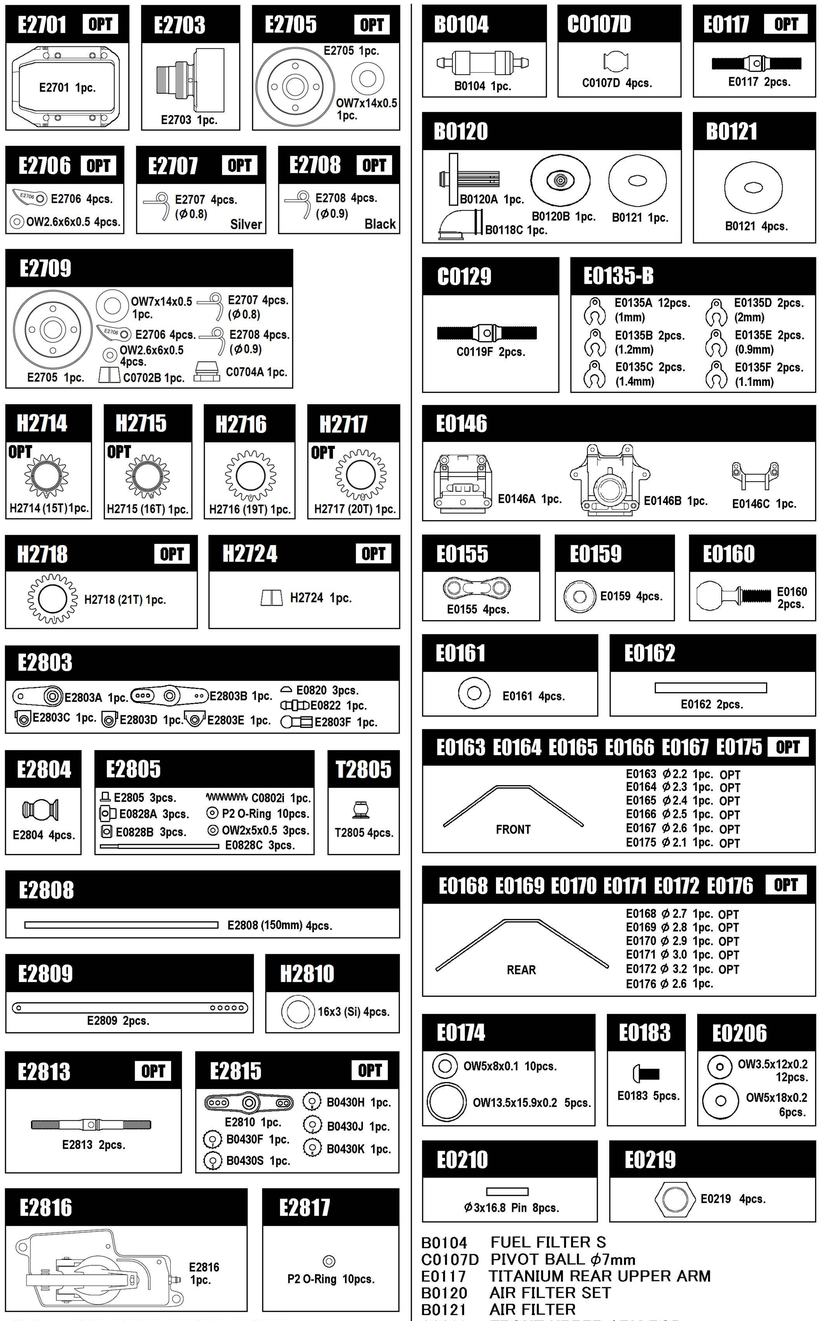

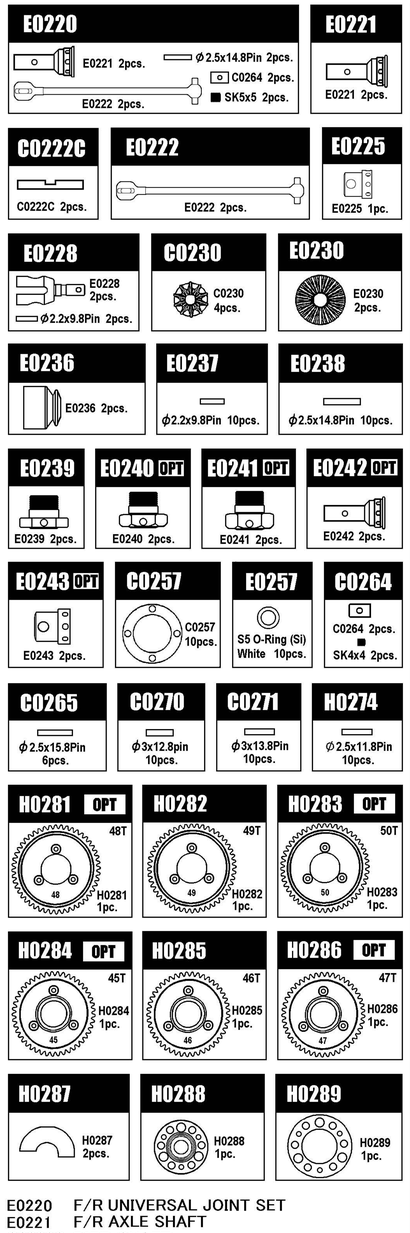

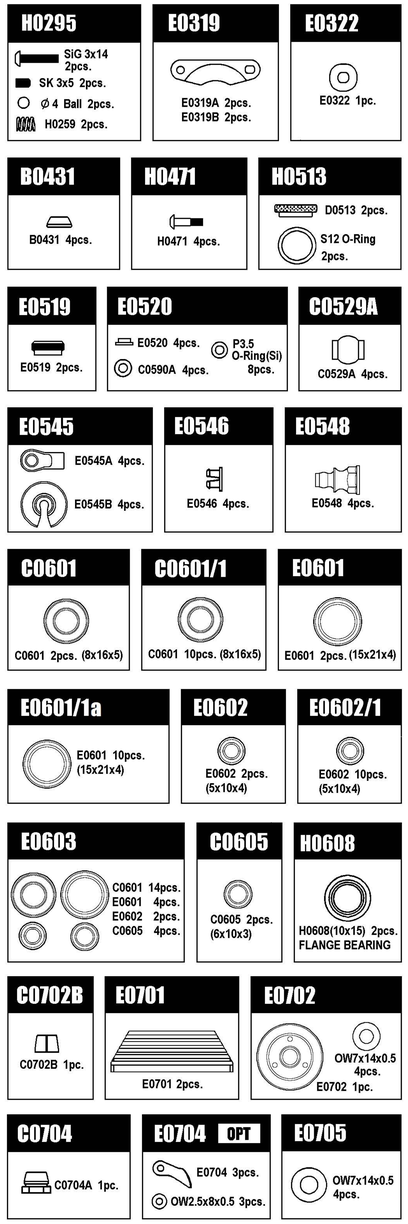

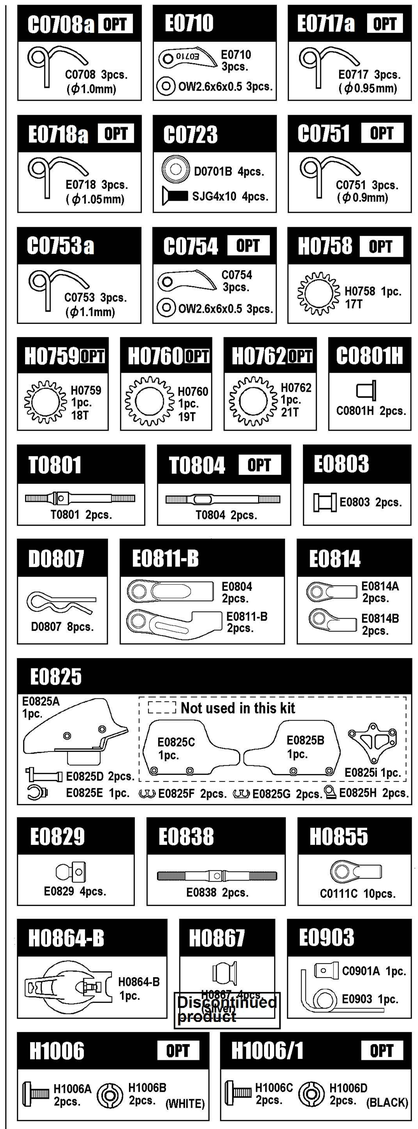

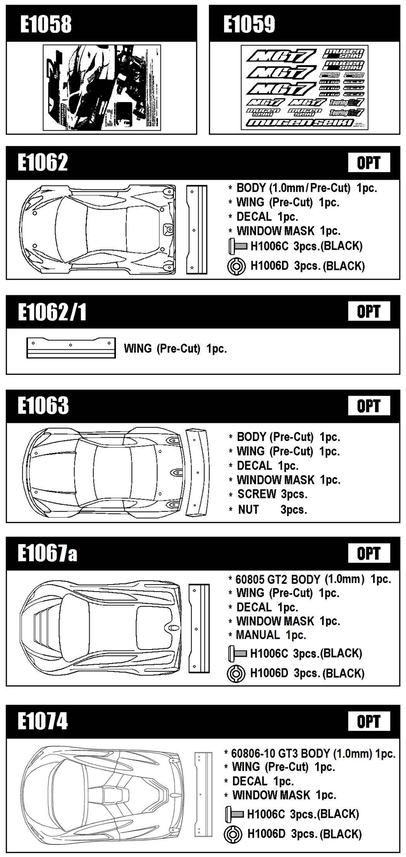

E1058 MGT7 INSTRUCTION MANUAL
E1059 MGT7/MGT7 ECO DECAL
E1062 GT BODY TYPE-B (1.0mm/Pre-Cut)
E1062/1 GT WING TYPE-B/B2 (Pre-Cut)
E1063 GT BODY TYPE-P (Pre-Cut)
E1067a GT BODY TYPE-B2 (1.0mm)
E1074 GT BODY TYPE GT3-GBS (1.0mm)

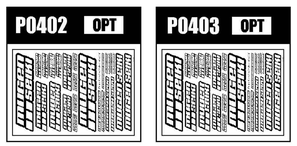

P0402 12 LOGO STICKER
P0403 12 LOGO STICKER (METALLIC)

E2701 ONE-PIECE ENGINE MOUNT
E2703 CLUTCH BELL
E2705 FLY WHEEL 4P
E2706 AL. CLUTCH SHOE 4P
E2707 CLUTCH SPRING 4P (φ0.8)
E2708 CLUTCH SPRING 4P (φ0.9)
E2709 CLUTCH SET 4P
H2714 H.D. PINION 1st. GEAR 15T
H2715 H.D. PINION 1st. GEAR 16T
H2716 H.D. PINION 2nd. GEAR 19T
H2717 H.D. PINION 2nd. GEAR 20T
H2718 H.D. PINION 2nd. GEAR 21T
H2724 TAPER CONE
E2803 SERVO HORN
E2804 PIVOT BALL
E2805 LINKAGE PARTS
T2805 AL. PIVOT BALL φ6mm
E2808 ANTENNA PIPE (150mm)
E2809 FUEL TANK CAP PULLER
H2810 O-RING FUEL TANK CAP (Si)
E2813 TITANIUM STEERING ROD 52
E2815 AL. SERVO HORN SET (TH)
E2816 FUEL TANK
E2817 P2 O-RINGS

B0104 FUEL FILTER S
C0107D PIVOT BALL φ7mm
E0117 TITANIUM REAR UPPER ARM
B0120 AIR FILTER SET
B0121 AIR FILTER
C0129 FRONT UPPER ARM ROD
E0135-B SUS. ARM SPACER
E0146 GEAR BOX
E0155 ANTI-ROLL BAR LINK
E0159 ADJUST NUT
E0160 FRONT LOWER KINGPIN BALL
E0161 FRONT TRACK WIDTH ADJUST SPACER
E0162 FRONT UPPER ARM SHAFT
E0163 FRONT ANTI-ROLL BAR φ2.2mm
E0164 FRONT ANTI-ROLL BAR φ2.3mm
E0165 FRONT ANTI-ROLL BAR φ2.4mm
E0166 FRONT ANTI-ROLL BAR φ2.5mm
E0167 FRONT ANTI-ROLL BAR φ2.6mm
E0168 REAR ANTI-ROLL BAR φ2.7mm
E0169 REAR ANTI-ROLL BAR φ2.8mm
E0170 REAR ANTI-ROLL BAR φ2.9mm
E0171 REAR ANTI-ROLL BAR φ3.0mm
E0172 REAR ANTI-ROLL BAR φ3.2mm
E0174 WASHER SET
E0175 FRONT ANTI-ROLL BAR φ2.1mm
E0176 REAR ANTI-ROLL BAR φ2.6mm
E0183 REBOUND STOP ADJ. SCREW
E0206 DIFF. WASHER SET
E0210 PIN φ3x16.8 (8pcs.)
E0219 SELF-LOCKING WHEEL NUT

E0220 F/R UNIVERSAL JOINT SET
E0221 F/R AXLE SHAFT
C0222C DIFF. SHAFT
E0222 F/R DRIVE SHAFT
E0225 JOINT CUP
E0228 F/R CUP JOINT
C0230 DIFF. GEAR 10T
E0230 DIFF. GEAR 18T
E0236 JOINT BOOTS
E0237 JOINT PIN (φ2.2x9.8) (FOR E0228)
E0238 JOINT PIN (φ2.5x14.8) (FOR E0220/E0221)
E0239 WHEEL HUB
E0240 WIDE OFFSET WHEEL HUB 1mm
E0241 WIDE OFFSET WHEEL HUB 2mm
E0242 AL. F/R AXLE SHAFT
E0243 AL. JOINT CUP
C0257 GASKET FOR DIFF.
E0257 S5 O-RINGS (SILICONE)
C0264 JOINT SHAFT
C0265 JOINT PIN (FOR E2224/E2225)
C0270 JOINT PIN (FOR E2222/E2223)
C0271 JOINT PIN (FOR E0222)
H0274 ROLLER PIN φ2.5x11.8 (10pcs.)
H0281 1st. GEAR 48T
H0282 1st. GEAR 49T
H0283 1st. GEAR 50T
H0284 2nd. GEAR 45T
H0285 2nd. GEAR 46T
H0286 2nd. GEAR 47T
H0287 SHOE FOR 2SPEED GEAR BOX
H0288 HOUSING FOR 1st. GEAR
H0289 HOUSING FOR 2nd. GEAR

H0295 SPRING FOR 2SPEED GEAR BOX
E0319 BRAKE PAD
E0322 RADIO BOX GROMMET
B0431 3mm CONE WASHER
H0471 REAR BODY MOUNT ARM PIN
H0513 SPRING ADJUSTER
E0519 OIL SEAL CAP
E0520 OIL SEAL SET
C0529A LINK BALL
E0545 DAMPER END
E0546 DAMPER MOUNT PIVOT BUSH
E0548 DAMPER MOUNT PIVOT
C0601 BEARING (8x16x5)
C0601/1 BEARING (8x16x5) 10pcs. SET
E0601 BEARING (15x21x4)
E0601/1a BEARING (15x21x4) 10pcs. SET
E0602 BEARING (5x10x4)
E0602/1 BEARING (5x10x4) 10pcs. SET
E0603 BEARING (24pcs.) SET
C0605 BEARING (6x10x3)
H0608 BEARING FOR 2nd. GEAR HOUSING
C0702B TAPER CONE
E0701 ENGINE MOUNT
E0702 FLY WHEEL
C0704 ENGINE NUT (SG)
E0704 AL. CLUTCH SHOE (LIGHT WEIGHT)
E0705 FLY WHEEL WASHER

C0708a 3P CLUTCH SPRING φ1.0mm
E0710 AL. CLUTCH SHOE (HARD)
E0717a 3P CLUTCH SPRING φ0.95mm
E0718a 3P CLUTCH SPRING φ1.05mm
C0723 ENGINE MOUNT FLAT SCREW
C0751 3P CLUTCH SPRING φ0.9mm
C0753a 3P CLUTCH SPRING φ1.1mm
C0754 AL. CLUTCH SHOE
H0758 1st. GEAR 17T
H0759 1st. GEAR 18T
H0760 2nd. GEAR 19T
H0762 2nd. GEAR 21T
C0801H PIVOT BUSH
T0801 STEERING ROD
T0804 TITANIUM STEERING ROD
E0803 FUEL TANK BUSH
D0807 BODY PIN 15/21
E0811-B REAR UPPER ARM LINK (LONG)
E0814 BALL LINK φ7mm
E0825 FUEL GUARD
E0829 ANTI-ROLL BAR LINK BALL
E0838 STEERING ROD 52
H0855 BALL LINK φ6mm
H0864-B FUEL TANK CAP
~~H0867 PIVOT BALL~~ ⇒ T2805
E0903 MUFFLER STAY
H1006 REAR SPOILER ADJ. SCREW (WHITE)
H1006/1 REAR SPOILER ADJ. SCREW (BLACK)

株式会社 無限精機 〒274-0817 千葉県船橋市高根町1395
MUGEN SEIKI CO.,LTD.
1395 Takane-Cho, Funabashi, Chiba 274-0817, Japan
表示価格には消費税が含まれていません。