DATE	12/3/2017
DRIVER	Atsushi Hara
TRACK	Huge / ITCMC 2017

CARPET ☐ ASPHALT ☑

TRACTION

LOW ☐	MEDIUM ☐	HIGH ☑

LAYOUT

SLOW ☐	MIXED ☐	FAST ☑

ELECTRIC`S

	TYPE	SETTINGS
STEERING SERVO	Futaba	BLS571SV
ESC	HW XR10	
ENGINE	HW 4.5T	
TYRES/ ADDITIVE	RIDE REX34	

FRONT: FULL ☑ MIN. 5

REAR: FULL ☑ MIN. 5

SHOCK ABSORBERS

FRONT		REAR	
PISTON	4	PISTON	4
OIL	#500	OIL	#500
SPRING	Xray 2.6	SPRING	Xray 2.6

ANTI ROLL BAR FRONT

1,2 ☐ 1,3 ☑ 1,4 ☐ 1,5 ☐

ANTI ROLL BAR REAR

1,1 ☐ 1,2 ☑ 1,3 ☐ 1,4 ☐

SERVO SAVER POSITION

FORWARD ☐ REARWARD ☑

8 ☑ 9 ☐ 10 ☐

PINION	27T	SPUR	116T

DIFF / SPOOL

DIFF: HIGH ☐ LOW ☑

SPOOL: HIGH ☐ LOW ☑

DIFF OIL CST: #5,000

SHOCK POSITION LOWER ARM

PART#	REAR Kit	PART#	FRONT Kit
HOLE POSITION BALL LINK	INSIDE ☐ OUTSIDE ☑	HOLE POSITION BALL LINK	INSIDE ☐ OUTSIDE ☑

FLEX

ULTRAFLEX ☐

☐ ☑ *1 TOPDECK ☑

☑ ☑ ←*2 SCREW`S ASSEMBLED *2→ ☑

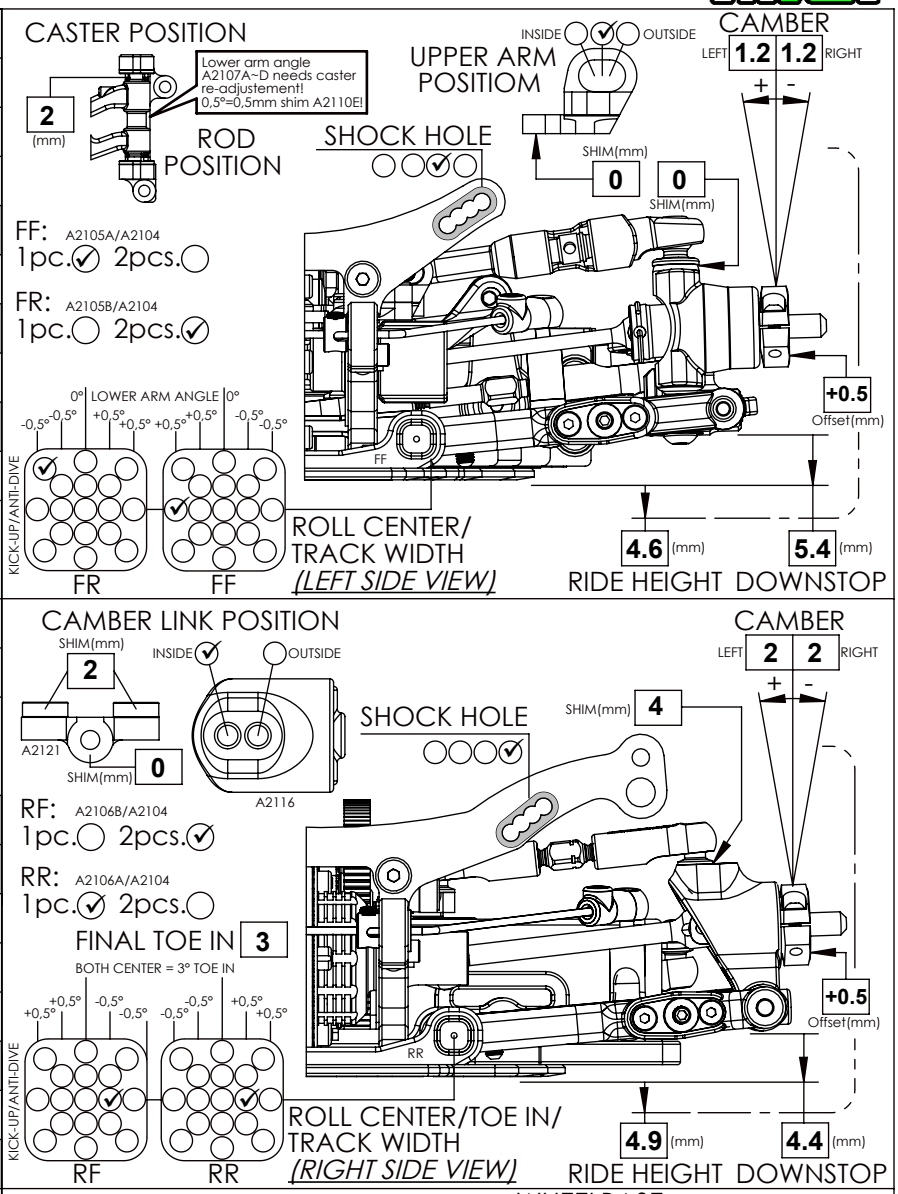

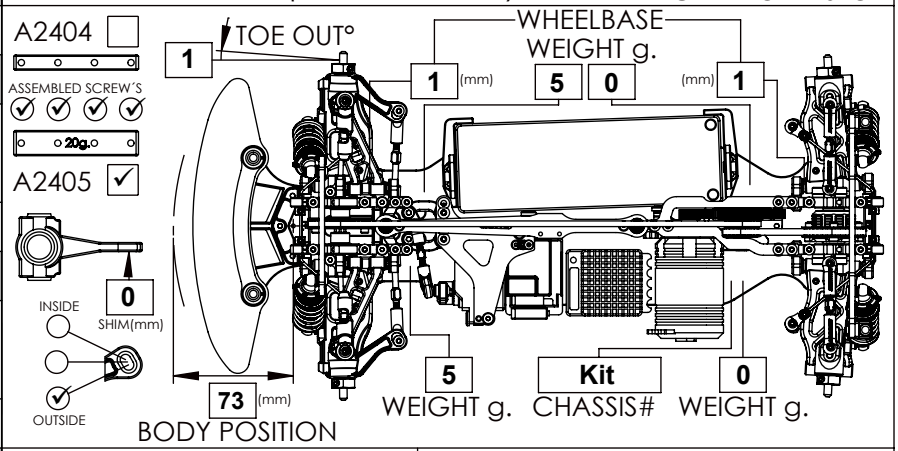

STEERING SHAFT MOUNTED ON: ☐ SERVOPLATE ☑ CHASSIS

STEERING STOPPER A2304/A2305/A2306

◯ ☑ ∅5 ☐ ∅5,5 ☐ ∅6 ☐ NO

WING TYPE: STD

BODY TYPE: PF LTC-R LW

8 OVERHANG(mm)

NOTES:

- 1mm shim under upper deck.
- RC Mission servo horn 20mm.
- A2121 upside down.

*1 Use set screw.

*2 Use flat head screw.